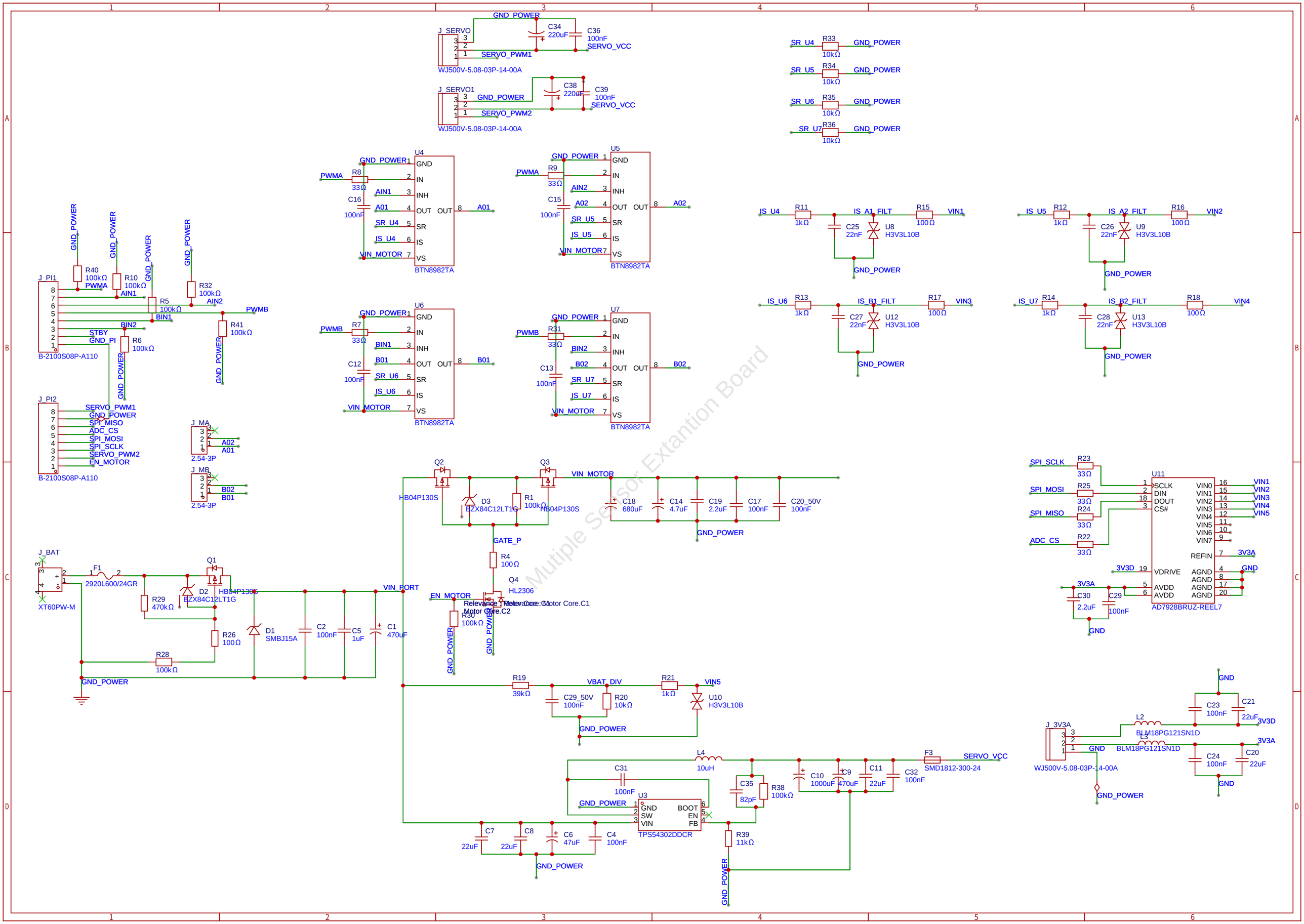
J_SERVO
WJ500V-5.08-03P-14-00A
GND_POWER
SERVO_PWM1
C34 220uF
C36 100nF
SERVO_VCC
J_SERVO1
WJ500V-5.08-03P-14-00A
GND_POWER
SERVO_PWM2
C38 220uF
C39 100nF
SERVO_VCC
SR_U4 R33 10kΩ GND_POWER
SR_U5 R34 10kΩ GND_POWER
SR_U6 R35 10kΩ GND_POWER
SR_U7 R36 10kΩ GND_POWER
U4 BTN8982TA
PWMA R8 33Ω
C16 100nF
GND_POWER
AIN1
A01
SR_U4
IS_U4
VIN_MOTOR
OUT
A01
U5 BTN8982TA
PWMA R9 33Ω
C15 100nF
AIN2
A02
SR_U5
IS_U5
VIN_MOTOR
OUT
A02
U6 BTN8982TA
PWMB R7 33Ω
C12 100nF
BIN1
B01
SR_U6
IS_U6
VIN_MOTOR
OUT
B01
U7 BTN8982TA
PWMB R31 33Ω
C13 100nF
BIN2
B02
SR_U7
IS_U7
VIN_MOTOR
OUT
B02
IS_U4 R11 1kΩ
C25 22nF
U8 H3V3L10B
IS_A1_FILT
R15 100Ω
VIN1
GND_POWER
IS_U5 R12 1kΩ
C26 22nF
U9 H3V3L10B
IS_A2_FILT
R16 100Ω
VIN2
GND_POWER
IS_U6 R13 1kΩ
C27 22nF
U12 H3V3L10B
IS_B1_FILT
R17 100Ω
VIN3
GND_POWER
IS_U7 R14 1kΩ
C28 22nF
U13 H3V3L10B
IS_B2_FILT
R18 100Ω
VIN4
GND_POWER
J_PI1
B-2100S08P-A110
GND_POWER
R40 100kΩ
R10 100kΩ
R32 100kΩ
PWMA
AIN1
AIN2
R5 100kΩ
BIN1
BIN2
PWMB
STBY
GND_PI
R6 100kΩ
R41 100kΩ
J_PI2
B-2100S08P-A110
SERVO_PWM1
GND_POWER
SPI_MISO
ADC_CS
SPI_MOSI
SPI_SCLK
SERVO_PWM2
EN_MOTOR
J_MA
2.54-3P
A02
A01
J_MB
2.54-3P
B02
B01
Q2 HB04P130S
Q3 HB04P130S
D3 BZX84C12LT1G
R1 100kΩ
VIN_MOTOR
C18 680uF
C14 4.7uF
C19 2.2uF
C17 100nF
C20_50V 100nF
GND_POWER
GATE_P
R4 100Ω
Q4 HL2306
EN_MOTOR
R30 100kΩ
GND_POWER
J_BAT
XT60PW-M
F1 2920L600/24GR
Q1 HB04P130S
D2 BZX84C12LT1G
R29 470kΩ
R26 100Ω
R28 100kΩ
D1 SMBJ15A
C2 100nF
C5 1uF
C1 470uF
VIN_PORT
GND_POWER
R19 39kΩ
C29_50V 100nF
VBAT_DIV
R20 10kΩ
R21 1kΩ
VIN5
U10 H3V3L10B
GND_POWER
L4 10uH
C31 100nF
U3 TPS54302DDCR
GND_POWER
GND
SW
VIN
BOOT
EN
FB
C7 22uF
C8 22uF
C6 47uF
C4 100nF
GND_POWER
C35 82pF
R38 100kΩ
R39 11kΩ
C10 1000uF
C9 470uF
C11 22uF
C32 100nF
F3 SMD1812-300-24
SERVO_VCC
SPI_SCLK R23 33Ω
SPI_MOSI R25 33Ω
SPI_MISO R24 33Ω
ADC_CS R22 33Ω
U11 AD7928BRUZ-REEL7
SCLK
DIN
DOUT
CS#
VDRIVE
AVDD
AVDD
VIN0
VIN1
VIN2
VIN3
VIN4
VIN5
VIN6
VIN7
REFIN
AGND
3V3D
3V3A
GND
C30 2.2uF
C29 100nF
J_3V3A
WJ500V-5.08-03P-14-00A
GND
GND_POWER
L2 BLM18PG121SN1D
L3 BLM18PG121SN1D
C23 100nF
C21 22uF
C24 100nF
C20 22uF
3V3D
3V3A
Mutiple Sensor Extantion Board